BROCHURE

Fuse protection solutions

When **energy** matters

socomec
Innovative Power Solutions

Why choose **fuse technology?**

Your challenges

Accidents involving electricity occur mainly during maintenance operations on your low-voltage systems (cabinets, enclosures, electrical outlets, etc.).

Did you know that arc flash is responsible for 30 % of accidents of electrical origin?
Low-voltage circuit breakers uses air alone to extinguish the electric arc when interrupting the short circuit current.
The high temperature of the electric arc (> 2000 °C) will cause the volatisation of the metal that the breaker's electrical contacts are made of. This will also cause a pressure increase inside the breaker, leading to degassing, i.e. the expulsion of conductive ionised gases and particles of melting conductive materials.

Following the degassing:
- the internal contacts of the breaker deteriorate,
- conductive dust spreads throughout the cabinet as well as inside the breaker,
- nearby equipment must be cleaned, and in some cases the cabinet must be completely replaced.

Choosing electrical protection with no sign of external manifestation when eliminating the fault increases protection of the electrical system and its users.

New 250 A breaker, of recent design tested at 18 kA 415 VAC.
Height of degassing spray: 3 m. - Icu of the tested breaker: 36 kA.

Our solutions

Maximum safety

Protect the user and the electrical system while avoiding any external manifestation when eliminating the fault

According to product standard requirement (EN 60269), the fuses do not allow any external sign during the fault elimination. The fuse technology guarantees containment of the electric arc within the body of the fuse.

No flash will be visible in case of fault, nor smoke or material expell. The sand filler contained in the ceramic body of the fuse absorbs all of the energy generated during the arc extinction, thus avoiding the emission of ionised gases and melted material.

This ensures maximum protection for the electrical system and its users.

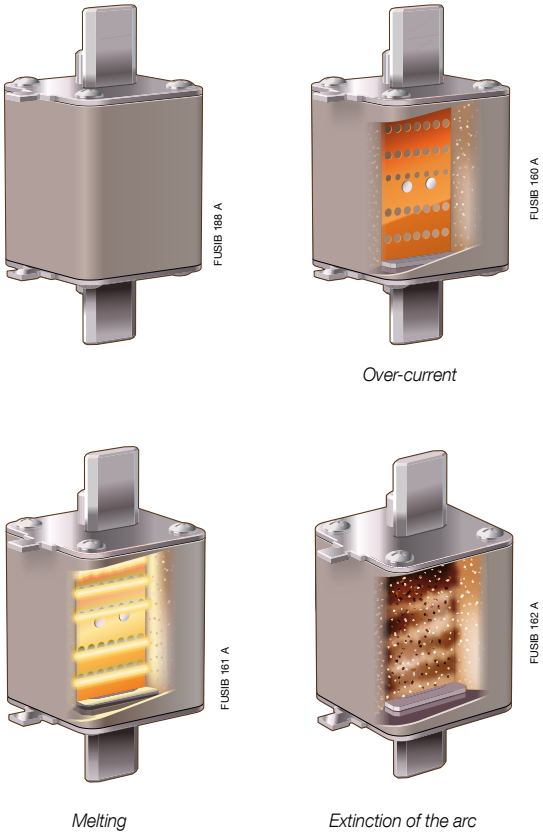

Total reliability

Separate the protection and switch functions

The fuse guarantees protection of the equipment against over-currents (overloads, short-circuits), while the switch guarantees a high number of load break operations and disconnection.
The separation of the protection and switching functions in Socomec devices ensures their reliability.

Fuse protection
Against short-circuits and overloads.

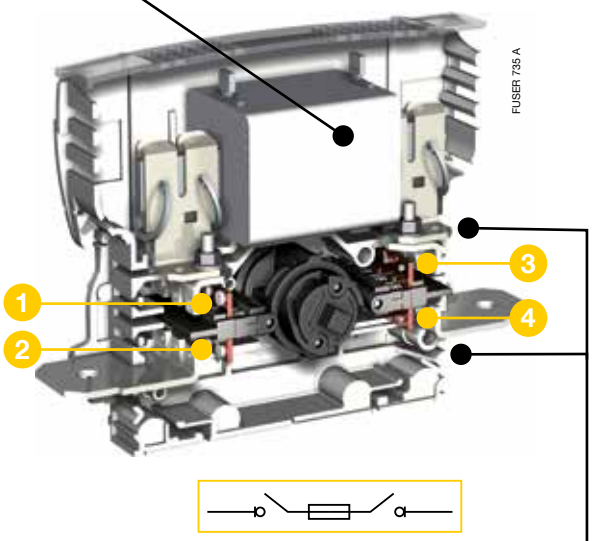

Load break switch

Quadruple breaking per phase (1 2 3 4) guarantees a high number of load break operations irrespective of the receiver (up to AC-23 A, 690 VAC as per IEC 60947-3 standard).
Top and bottom disconnection of the fuses ensures the safety of personnel.

Guaranteed performance

Greatly limiting the short-circuit current and minimising its destructive effect on the equipment

No device can compete with the exceptional speed of the fuse with regard to limitation of short-circuit current and I^2t let-through energy.

Several milliseconds are sufficient to completely eliminate a strong short-circuit current (up to 120 kA).

The uR (ultra-rapid) fuse is the only efficient device for protecting power electronics equipment: voltage up to 1000 VAC / 1500 VDC, short-circuit current up to 200 kA.

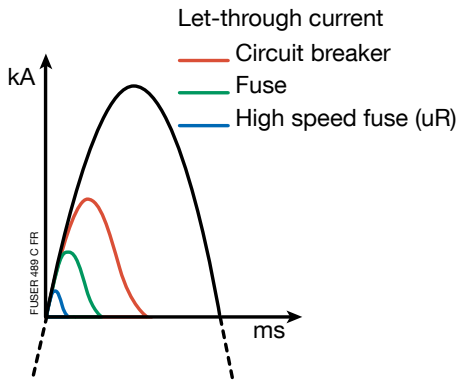

The thermal and mechanical effects of short circuits can be considerable: an 80 kA short circuit is identical to a force of 59,000 N applied to the busbars and any device supplied by it.

The fuse eliminates the fault in less than 5 ms.

The fuse combination switch solution: **ultimate safety in electrical protection**

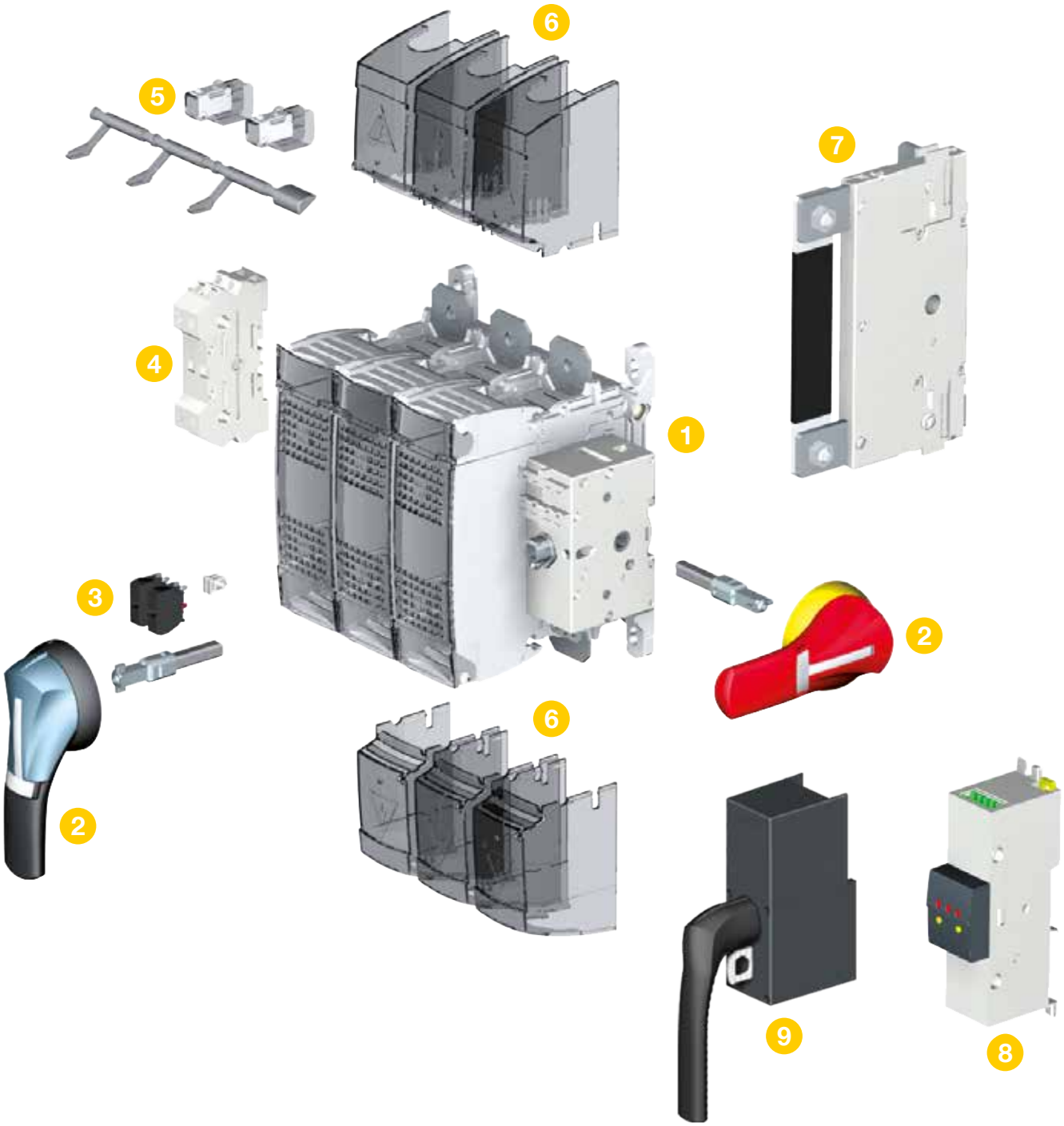

A multi-standard line certified by independent agencies

1 *FUSERBLOC* fuse combination switch

- Solution approved for use in the most severe applications: protection and disconnection of motors, unbalanced loads.
- Wide output tesminals allow easy connection of high section cables.
- The modular concept guarantees complete double insulation between each phase and avoids any risk of internal arc.
- Double break per phase: top and bottom disconnection of fuses.
- **TEST Position:** allows auxiliary circuits to be tested (control circuits), whithout switching the power circuits and keeping it offload.

2 External front operation handle / External side operation handle

- Robust design guarantees protection up to IP66 / IK08.
- Quick mounting from outside of the enclosure.
- Available in black / blue and red / yellow for safety applications.

3 Programmable U-type auxiliary contacts

- Pre-break and signalling of positions 0, I and Test.
- Front side mounted A.C. modules, comprised within the product footprint, practical for easy upgrading of the installation.

4 Auxiliary power contacts (up to 10 A / 250 V)

- Simultaneous control of power demanding auxiliary equipment and main poles.

5 Mechanical fuse melting detector (DDMM)

- The DDMM remotely reports the status of fuses and prevents from risk of abnormal functioning of the electrical system and equipment.
- Integrated into the product footprint (optional).

6 Top or bottom terminal shrouds

- IP2X protective cover provides protection against direct contacts with live parts.

7 Integrated solid neutral link

- In case of non-distributed neutral or neutral combined with the PE (PEN conductor in TNC earth arrangements) and extra-flat neutral module mounted on the gearbox allows to have a three-pole switch fuse with solid neutral link within the same footprint as a standard three-pole device (+ 3 mm extra).

8 Electronic fuse melting detector (FMD)

Associated with the ***FUSERBLOC***, fuse bases or fuse holders and compatible with DIN, BS88 and UL fuses, the FMD is more than an accessory, it provides:

- monitoring functions that are necessary to create a supervision or automatical alert system,
- visual LED signalling of the worked fuses,
- bi-stable relay for automation: alarm or triggering,
- compatible with single or three-phase installations,
- **TEST button:** verification at any time of the proper operation of the product,
- backplate, DIN rail or door mounting directly on the ***FUSERBLOC***.

9 Direct control box

Improved safety

The double phase isolator (upstreamdownstream of the fuse) and fully visible isolation guarantee the safety of people and equipment against overcurrents.

High breaking capacity

High breaking capacity fuses (100 kA rms) provide protection against overloads and shortcircuits.

Multi-use

The unit can be equipped with front or side operation handle, mounted directly on the product, or outside, with the possibility of installing it on the door or on the side of an electrical box or cabinet.

Simplified use

The TEST position enables testing of the control circuits without turning on the power thanks to the use of U-type auxiliary contacts. In the TEST position, the cabinet door can be opened.

Fuse solutions adapted to your applications

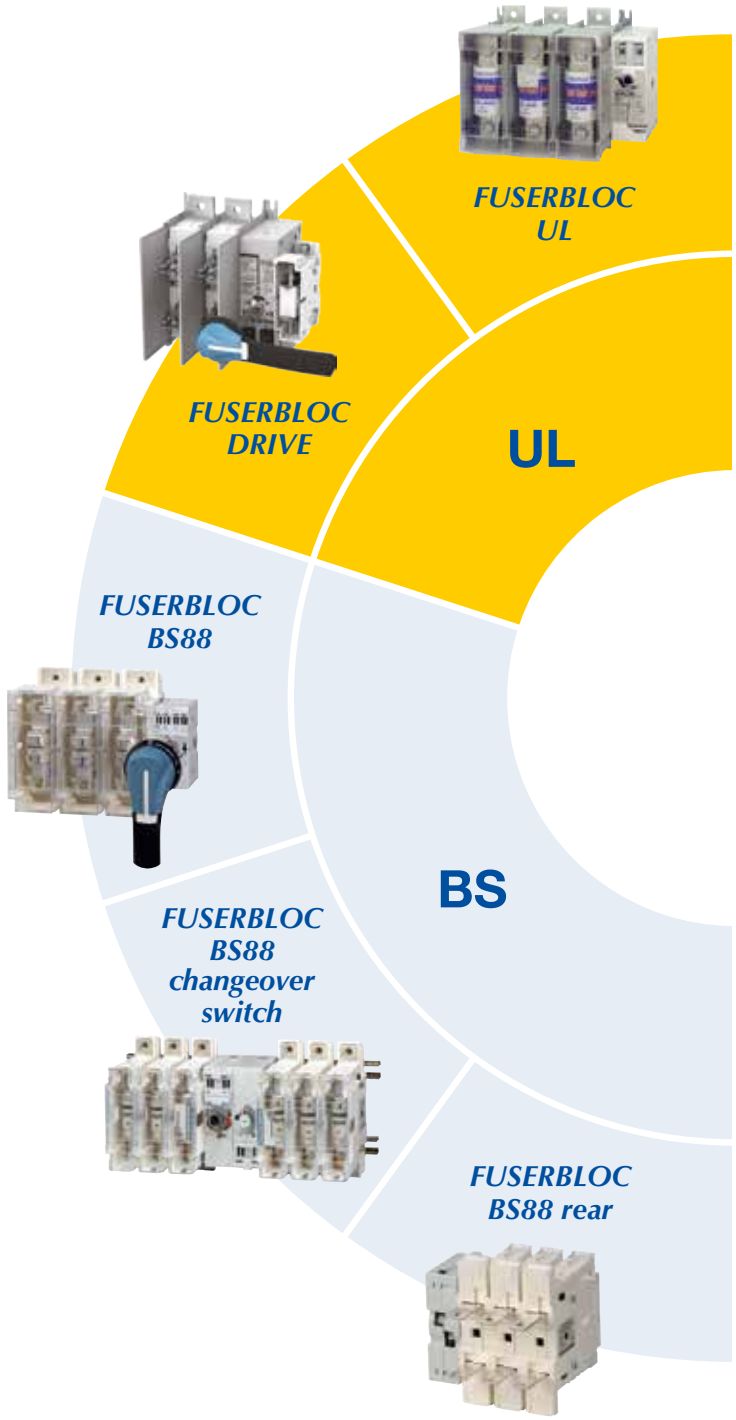

UL

FUSERBLOC UL

Fuse load break switches

FUSERBLOC UL units are manually-operated multipole fuse load break switches with external right front-side operation and comply with UL and CSA standards.This range is available in right front-side, direct or external control, in 2, 3 and 4 poles and up to 800 A.

BS

FUSERBLOC BS88

Fuse load break switches

FUSERBLOC BS 88 units with right front-side operation are manually-operated multipole fuse load break switches. This range is available in direct and external operation, in 2, 3 and 4 poles and up to 1250 A.

FUSERBLOC BS88 changeover switch

BS fuse combination changeover switches

FUSERBLOC BS 88 changeover switch changeover switches with front operation are manual control multipole fuse combination changeover switches. This range includes versions for direct and external operation, 3 and 4 poles and up to 400 A.

FUSERBLOC BS88 Rear

Fuse combination switches with rear connection

FUSERBLOC BS88 Rear units are fuse combination switches with rear connection and right front-side manual control which are available in various connection combinations. This range includes versions for direct and external operation, 3 and 4 poles and up to 400 A.

Also available

Fuses for energy storage systems

FP ESS fuses are designed for DC networks with high voltage and short-circuit levels. They effectively protect battery racks and battery connection panel (BCP) against short circuits and overloads.

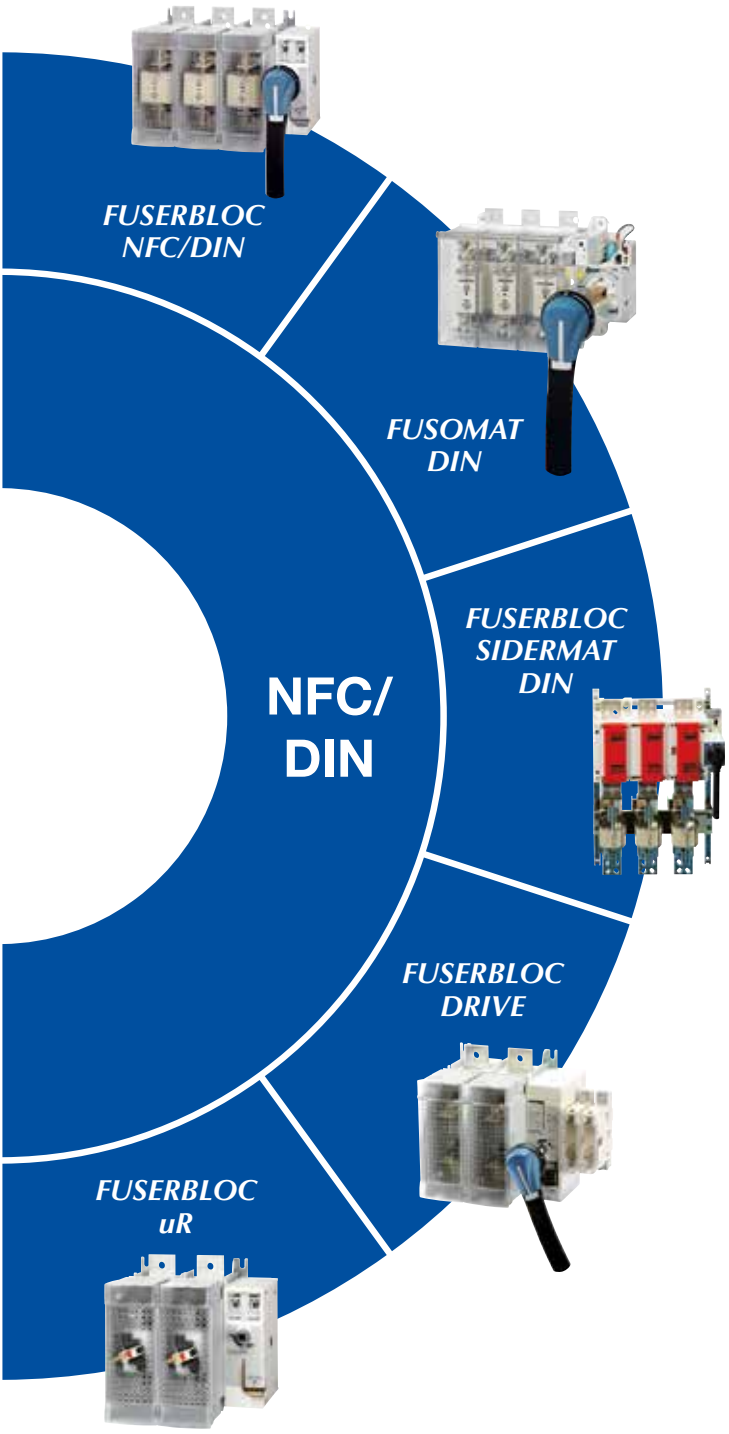

NFC/DIN

FUSERBLOC NFC/DIN

Fuse combination switches

FUSERBLOC NFC/DIN units are manually operated multipolar fuse load break switches. This range is available in right front-side, left side and central front, direct or external operation, with 2, 3 and 4 poles and up to 1250 A.

FUSERBLOC DRIVE

Pre-charge 2-pole fuse load break switches for variable speed drive

FUSERBLOC DRIVE units with manual front operation are multipole DC fuse load break switches. This range is available in direct and external operation, in 2 power poles + 2 pre-charge poles*, up to 1600 A.

FUSOMAT DIN

Fuse combination switches with tripping function

FUSOMAT fuse-combination switches are manually operated 3 or 4-pole load break switches with visible breaking and a remote tripping function. This range is available from 250 to 1250 A.

FUSERBLOC uR

Fuse combination switches for protecting power semiconductors

FUSERBLOC uR are multipole fuse combination switches with manual right and front operating and high-speed fuses. This range includes versions for direct and external operation, 2, 3 and 4 poles and up to 1250 A.

COMBINED SIDERMAT DIN

Fuse combination switches with tripping function

SIDERMAT combinations are manually operated 3 or 4-pole load break switches with a remote tripping function. This range is available from 800 to 1800 A.

Fuse holders and bases

The fuse holders and bases are supports for cylindrical fuses (NFC) or knife-blade fuses (DIN). They protect the cables and equipment in control or distribution cabinets.

Enclosed solutions

Range of steel and polyester enclosures equipped with ***FUSERBLOC*** switches.

Socomec: our innovations supporting your energy performance

1 independent manufacturer

4,200 employees worldwide

8 % of sales revenue dedicated to R&D

400 experts dedicated to service provision

Your power management expert

POWER SWITCHING

POWER MONITORING

POWER CONVERSION

ENERGY STORAGE

EXPERT SERVICES

The specialist for critical applications

- Control, command of LV facilities
- Safety of persons and assets
- Measurement of electrical parameters
- Energy management
- Energy quality
- Energy availability
- Energy storage
- Prevention and repairs
- Measurement and analysis
- Optimisation
- Consultancy, commissioning and training

A worldwide presence

12 production sites
- France (x3)
- Italy (x2)
- Tunisia
- India
- China (x2)
- USA (x2)
- Canada

30 subsidiaries and commercial locations
- Algeria • Australia • Austria • Belgium • China • Canada
- Dubai (United Arab Emirates) • France • Germany
- India • Indonesia • Italy • Ivory Coast • Malaysia
- Netherlands • Poland • Portugal • Romania • Serbia
- Singapore • Slovenia • South Africa • Spain • Sweden
- Switzerland • Thailand • Tunisia • Turkey • UK • USA

80 countries where our brand is distributed

HEAD OFFICE

SOCOMEC GROUP
SAS SOCOMEC capital 10 568 020 €
R.C.S. Strasbourg B 548 500 149
B.P. 60010 - 1, rue de Westhouse
F-67235 Benfeld Cedex
Tel. +33 3 88 57 41 41 - Fax +33 3 88 57 78 78
info.scp.isd@socomec.com

www.socomec.com

YOUR DISTRIBUTOR / PARTNER

100 years OF SHARED ENERGY

socomec Innovative Power Solutions

Non contractual document. © 2024, Socomec SAS. All rights reserved. - Document printed on paper from sustainably managed forests.

DOC 01199 02 en - 09/24 - Photo: Martin Bernhart - Réalisation: Socomec - Gyss Imprimeur Obernai