TECHNICAL NOTE

ISOM Digiware architectures

When **energy** matters

socomec
Innovative Power Solutions

Introduction

This technical note sets out to describe the different ISOM Digiware architectures that can serve most examples of insulation monitoring and electrical IT system monitoring.
The following types of architecture take into account upstream monitoring generally across the entire facility, as well as downstream across the divisions, machine cabinets, terminal loads, etc.
The interoperability of the devices covers different connections and communication protocols:
- Digiware bus
- RS485 – RTU Modbus
- Ethernet – TCP Modbus

This list of architectures is not exhaustive and can be easily adapted to the type of application.

Glossary

RTU Modbus protocol
- Medium: 2 to 3-wire RS485 link
- Master/slave mode
- Consists of frames with the slave address, the relevant function (writing, reading), the data and the error verification code

TCP Modbus protocol
- Medium: Ethernet
- Client/server mode
- Consists of Ethernet frames with the relevant function (writing, reading), the data and the error verification code

ISOM Digiware system
- Monitoring system comprising at least one ISOM Digiware L-60 insulation monitoring device module and an ISOM Digiware D-x5 display.
- The display D-x5 can locally manage a maximum of 32 Digiware slaves.
- The system can be enhanced with a fault location function by adding ISOM Digiware F-60 fault location modules and locating core balance transformers.
- The system can be extended to other electrical parameters (E, P, U, I, f, FP) by adding a DIRIS Digiware U voltage measurement module and current sensors connected to the F-60 modules.
- Add DIRIS Digiware I power modules and current sensors to include other measurements of electrical magnitudes (imbalance, THD, harmonics, etc.).
- The modules and displays communicate and exchange data via the Digiware bus using special RJ45 cables.
- The Modbus RTU link of the ISOM Digiware D-x5 display works as a master or slave (from v2.0) which allows in particular to retrieve data from other products with Modbus RTU link (DIRIS A-40, DIRIS A-20, DIRIS Digiware…).
- The system communicates and exchanges data with the outside world through the ISOM Digiware D-x5 display via Ethernet following the TCP Modbus protocol.

Note: Example of an ISOM Digiware configuration

Legends

The following diagram explains the symbols used in all the architectures shown in this document.

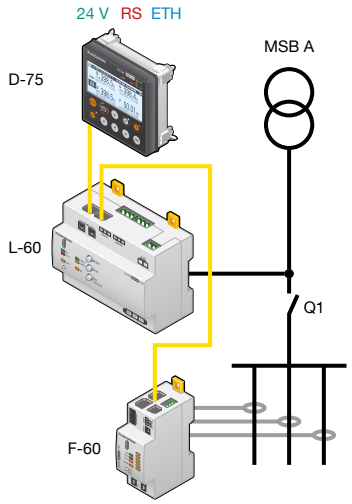

: Digiware Bus (RJ45)
: Fault-locating core balance transformers toward T-15 adapter (RJ9)
24 V: 24 V power supply
RS: RS485 connection
ETH: Ethernet connection

Note: Legend.
Note: To simplify the diagrams, the power supply units and the current measurement sensors (TE, TR, TF) are not shown. For more details on the configuration of the products, please refer to their operating instructions.

Contents

Introduction 2
Glossary 2
Legend 3

Single-source network 6
Insulation monitoring device (IMD) 6
Insulation monitoring with fault location (IMD + IFL) 6
Insulation monitoring with fault location and multi-measuring (IMD + IFL + PMD) 7

Insulation monitoring with fault location for large facilities 8

Hospital applications 9
Single network for medical facilities 9
Multiple network for medical facilities 10

Coupled networks 11
Initial state: independent networks 12
Coupled state: interconnected networks supplied by 2 sources 13
Coupled state: interconnected networks supplied by 1 source 14

Coupled networks with remote F-60s 15
Initial state: independent networks with remote F-60 17
Coupled state: interconnected networks with remote F-60, IMD source Nr 1 active 18
Coupled state: interconnected networks with remote F-60, IMD source Nr 2 active 19

Single-source network

Simple insulation monitoring (IMD)

In this mode, the ISOM Digiware L-60 insulation monitoring device (IMD) monitors the insulation of the entire facility. The insulation measurements are sent to and visualised on the ISOM Digiware D-x5 display via the Digiware bus.

Equipment
• 1x ISOM Digiware D-55 or D-75 display • 1x IMD ISOM Digiware L-60

If there is an insulation fault, an alarm LED lights up on the IMD. This alert is also shown on the display. You can also set an audible alarm in the settings.

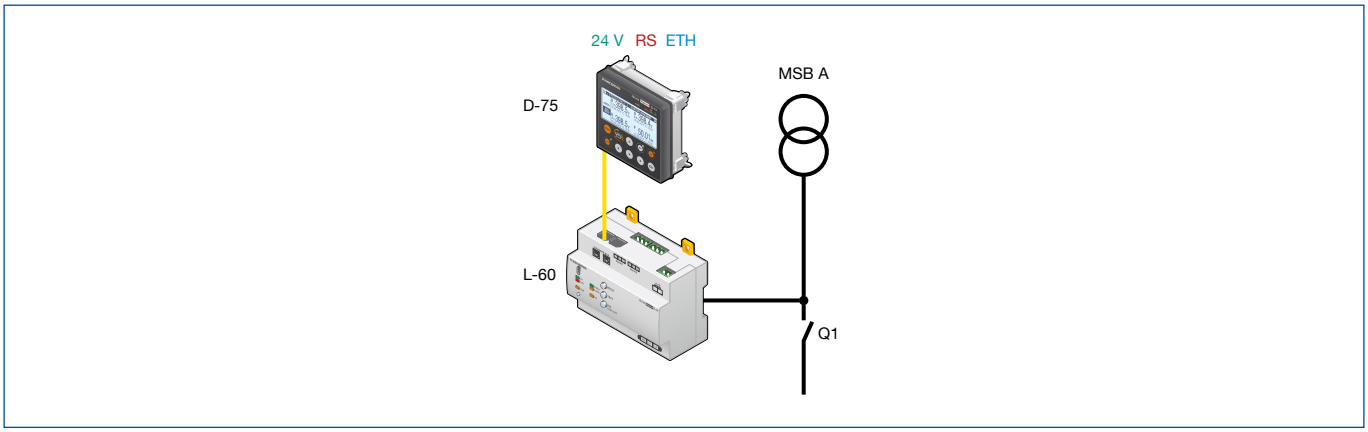

Fig. 1: Insulation monitoring.

Insulation monitoring with fault location (IMD + IFL)

To locate a fault, the ISOM Digiware L-60 insulation monitoring device (IMD) is linked to ISOM Digiware F-60 insulation fault locator (IFL). The insulation impedance (resistance and capacity) is measured across the entire system and across each circuit that features insulation fault-locating core balance transformers (ΔIP, WR/TFR or ΔIP-R) combined with the ISOM T-15 adapter.

Equipment
• 1x ISOM Digiware D-55 or D-75 display • 1x ISOM Digiware L-60 IMD • ISOM Digiware F-60 IFLs • Fault-locating core balance transformers (ΔIP, WR/TFR or ΔIP-R) + ISOM T-15 adapters

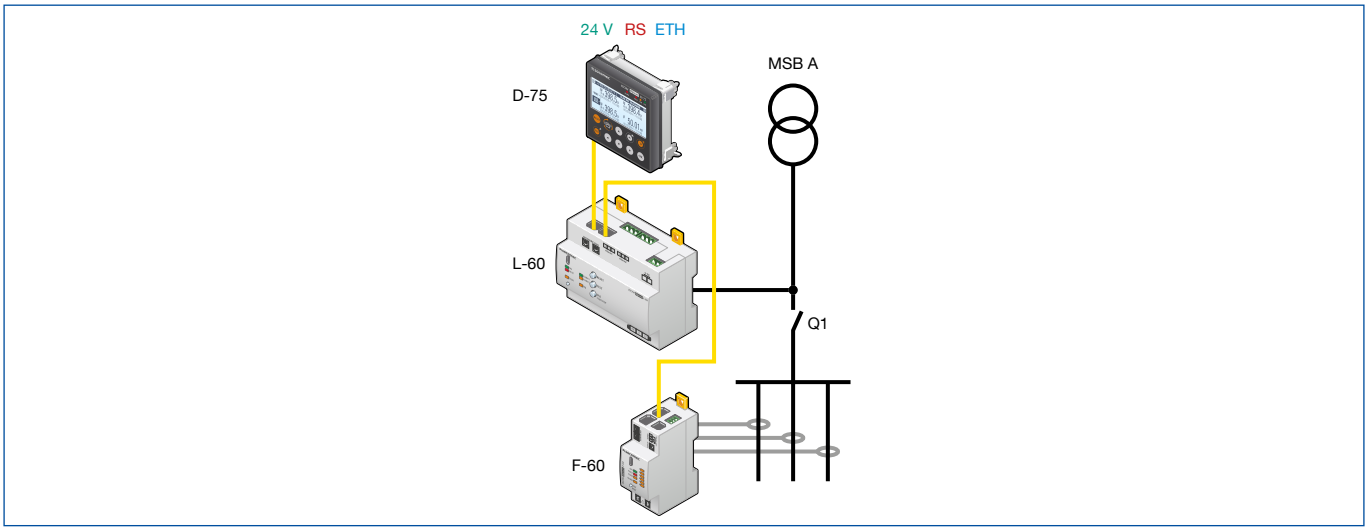

Fig. 2: Insulation monitoring + fault location.

With the OhmScanner* solution, you can map the system's insulation and track circuit insulation over the course of time. In this configuration, the solution comes independently of the electrical facility's electrical measurement parameters (E, P, U, I, f, FP).

Insulation monitoring with fault location and power monitoring (IMD + IFL + PMD)

Insulation monitoring and fault location are linked to the facility's monitoring system. Compared to the previous configuration, a DIRIS Digiware U voltage measurement module is added, to extend the system in line with the facility's other electrical parameters (E, P, U, I, f, FP).
In addition to fault-locating core balance transformers, ISOM Digiware F-60 modules are subsequently equipped with current sensors to measure electrical parameters.

Note: In this case, the monitored power grid settings are based on the DIRIS Digiware U voltage module. The communication speed of module U must be set to 115,200 bauds.

Equipment
• 1x ISOM Digiware D-55 or D-75 display • 1x ISOM Digiware L-60 IMD • 1x DIRIS Digiware U voltage module • ISOM Digiware F-60 IFLs • Fault-locating core balance transformers (ΔIP, WR/TFR, ΔIP-R) + ISOM T-15 adapters • Current measurement sensors (TE, TR, TF)

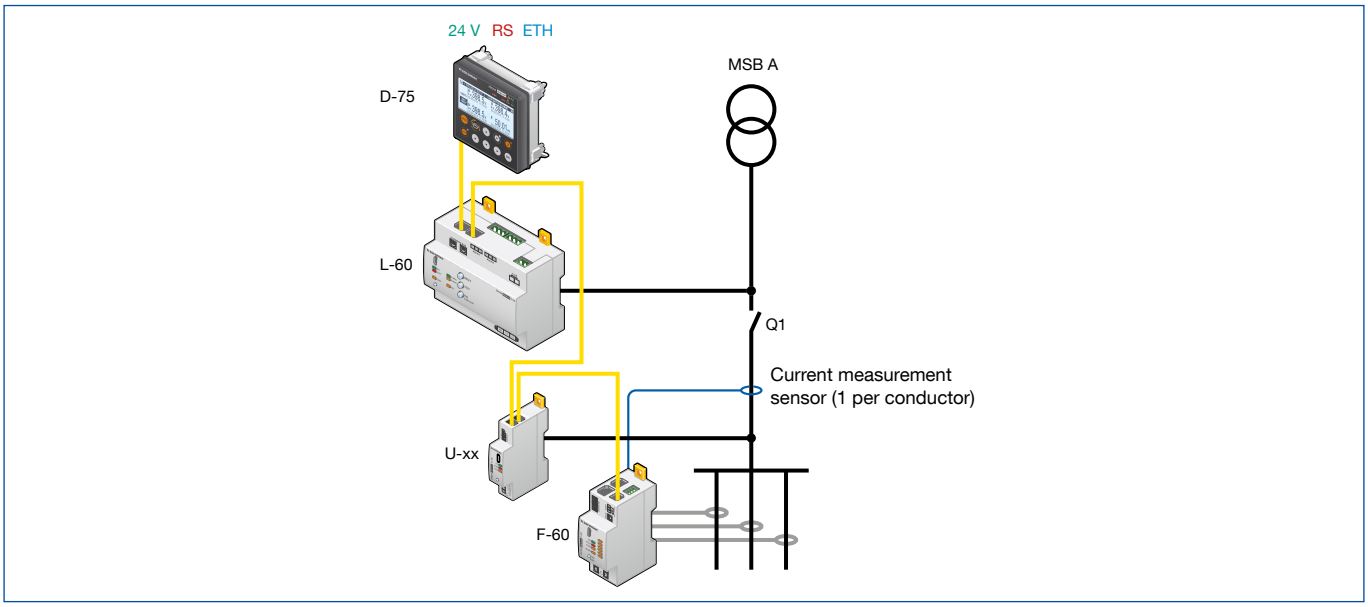

Fig. 3: Insulation and power monitoring + fault location.

The OhmScanner* solution is available in this configuration, in correlation with the electrical facility's electrical measurement parameters (E, P, U, I, f, FP).

** To find out more, please read the technical note, "Take control of your insulation with unearthed IT systems"*

Insulation monitoring with fault location for large facilities

For large facilities with remote circuits where a Digiware link could not be set up, it is possible to locate insulation faults downstream of the installation (architecture 1) or locate insulation faults and to use the OhmScanner technology (architecture 2).

Architecture 1: IFL ISOM Digiware F-60 remote modules* linked to a C-31 module and a U module
- C-31 is connected to the U and F-60 modules via the Digiware bus.
- The U module is used to manage the time stamping of the events of the remote F-60.
- The insulation fault is signalled by alarm LEDs on the F-60 and on the T-15 adapter.
- If the RS485 link is connected between the C-31 and the D-x5 display, in case of an insulation fault, the alarm is sent to the D-x5 display.
- The system's electrical parameters (E, P, U, I, f, FP) are measured if module U is present.

Local equipment	Remote equipment
• 1x ISOM Digiware D-55 or D-75 display • 1x ISOM Digiware L-60 IMD • 1x DIRIS Digiware U optional • ISOM Digiware F-60 IFLs • Fault-locating core balance transformers • Current measurement sensors (if U is present)	• 1x C-31 control interface • 1x DIRIS Digiware U-xx • ISOM Digiware F-60 IFLs • Fault-locating core balance transformers • Current measurement sensors

Architecture 2: IFL ISOM Digiware F-60 remote modules** connected to a D-x5 display and U module via Ethernet
- The D-x5 downstream is connected to the D-x5 upstream via Ethernet.
- The D-x5 downstream is connected to the U module and to the F-60 by the Digiware bus.
- The U module is used to manage the timestamping of events.
- The insulation fault will be signaled by the alarm LEDs on the F-60, on the T-15 adapter and on the D-55 local display.
- The electrical parameters of the installation (E P, U, I, f, FP) are measured if module U is present.

Setup procedure:
- Declare the IP address of the D-x5 downstream in the typology of the D-x5 upstream.
- Declare the IP address of the D-x5 upstream in the typology of the D-x5 downstream.
- Force the IN2 function on the master L-60 (see chapter "Coupled networks p.11").

Local equipment	Remote equipment
• 1x ISOM Digiware D-55 or D-75 display • 1x ISOM Digiware L-60 IMD • 1x DIRIS Digiware U optional • ISOM Digiware F-60 IFLs • Fault-locating core balance transformers • Current measurement sensors (if U is present)	• 1x ISOM Digiware D-55 or D-75 display • 1 DIRIS Digiware U-xx • ISOM Digiware F-60 IFLs • Fault-locating core balance transformers • Current measurement sensors (if U is present)

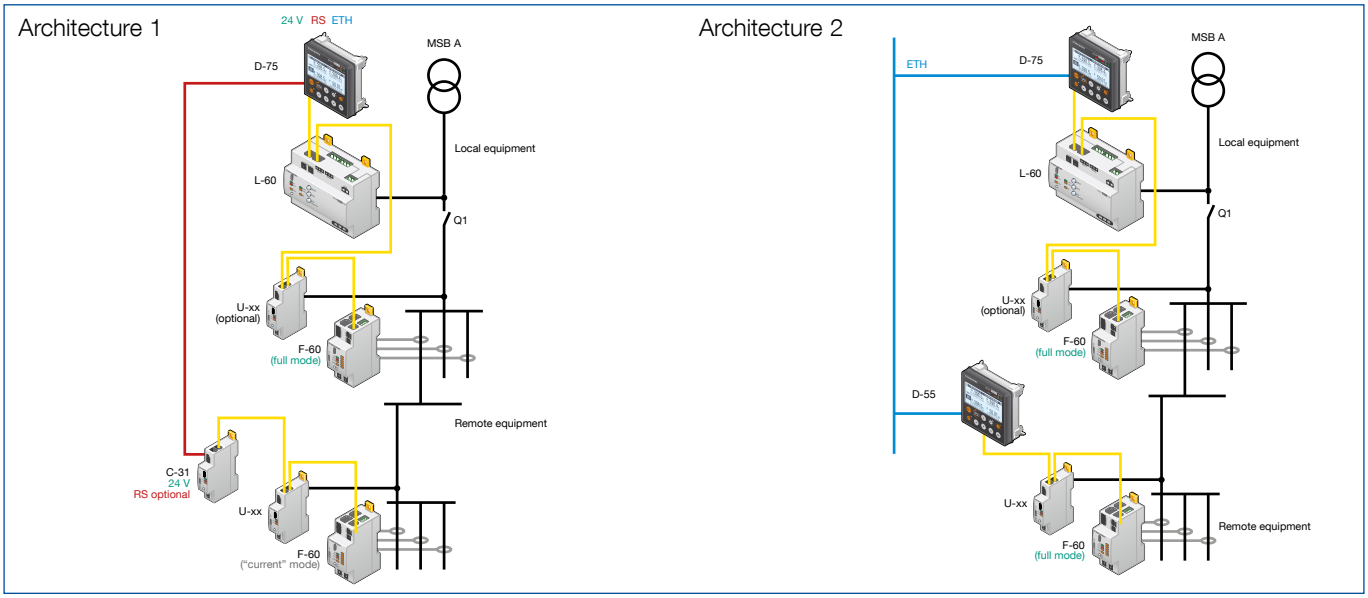

Fig. 4: Insulation monitoring architectures + fault location for large facilities.

** The remote F-60 will necessarily be configured in "current" mode. This mode is used to report the alarm status and the value of the location current on the D-55/D-75.*

*** The remote F-60 will be configured in "full" mode. This mode is used to report the alarm state, the resistive and capacitive values of the insulation fault as well as the locating current value on the D-55/D-75.*

Hospital applications

Single network for medical facilities

A medical IT network (e.g. surgical unit) is monitored using an ISOM Digiware L-60h medical IMD and a special ISOM Digiware D-55h display.
Alarms are triggered if there is an insulation fault or if the medical IT transformer overheats or overloads in accordance with IEC 60364-7-710 facility standards and IEC 61557-8 Appendix A. The summary report of the alarms is provided in the medical facility by ISOM D-15h.
In order to ensure overload monitoring using ISOM Digiware, an ISOM Digiware F-60 must be used:

- single-phase: with a channel dedicated to this measurement (with a Digiware current sensor),
- three-phase: with 3 channels dedicated to this measurement (with 3 Digiware current sensors),
- when using a F-60 with locating sensors and current sensors, in the order of the channels, first declare the locating sensors then the current sensors.

Note: Per ISOM Digiware system, only one F-60 can be used for overload monitoring.

Overheating is monitored with the use of a SOCOMEC PTC probe or a third party digital probe connected to the dedicated input of the IMD ISOM L-60h.

Equipment
• 1x ISOM Digiware D-55h display • 1x IMD for medical facilities, ISOM Digiware L-60h • ISOM Digiware F-60 IFLs (for fault location and/or monitoring of overload) • Fault-locating core balance transformers (ΔIP, WR/TFR or ΔIP-R) + ISOM T-15 adapters • 1x ISOM D-15h alarm report

If there is an insulation fault, an alarm LED lights up on the IMD. This alert is also shown on the display. You can also set an audible alarm in the settings. The second LED alarm is triggered if the medical IT transformer overheats or overloads.

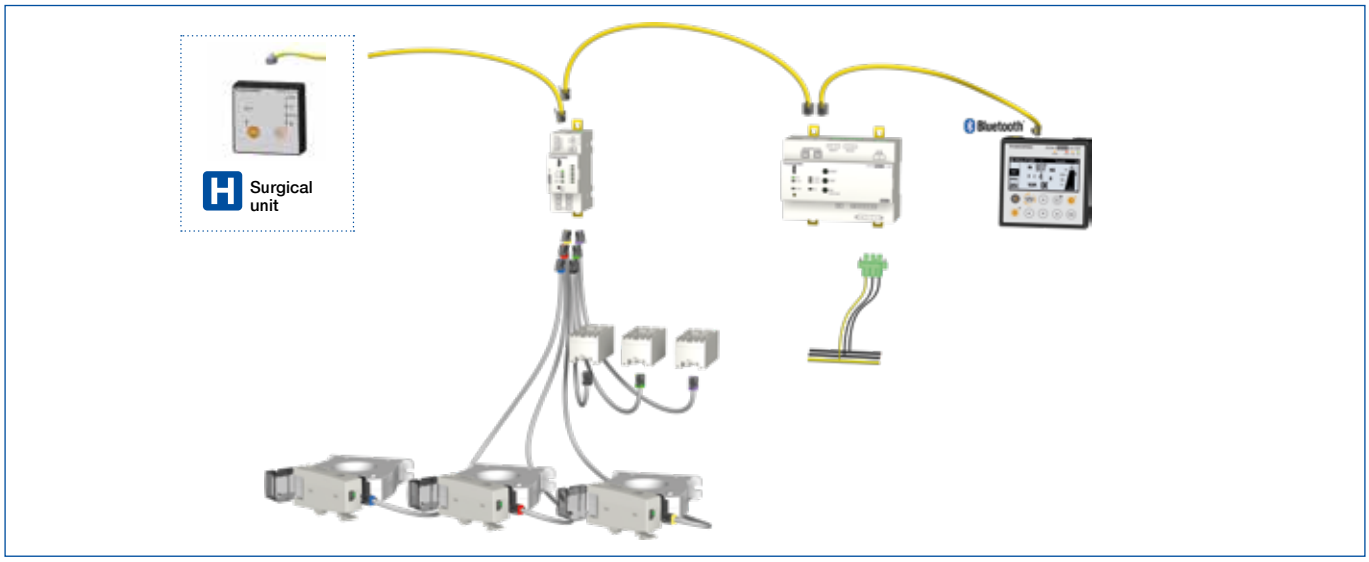

Fig. 5: Insulation monitoring + fault location for hospital applications

Multiple network for medical facilities

This mode is commonly used if there are 2 medical IT transformers, for example, supplying a single medical facility (e.g. surgical unit). Power per IT transformer is limited to 10 kVA according to IEC 60364-7-710.
Alarms are triggered in case of an insulation fault or if medical IT transformers overheat or overload. The master ISOM Digiware D-55h sends summary alarm reports from all the medical IT transformers in the operating room.

Equipment
• 1x master ISOM Digiware D-55h display • 2x slave ISOM Digiware D-55h displays • 2x IMDs for medical facilities, ISOM Digiware L-60h • ISOM Digiware F-60 IFLs • Fault-locating core balance transformers (ΔIP, WR/TFR or ΔIP-R) + ISOM T-15 adapters

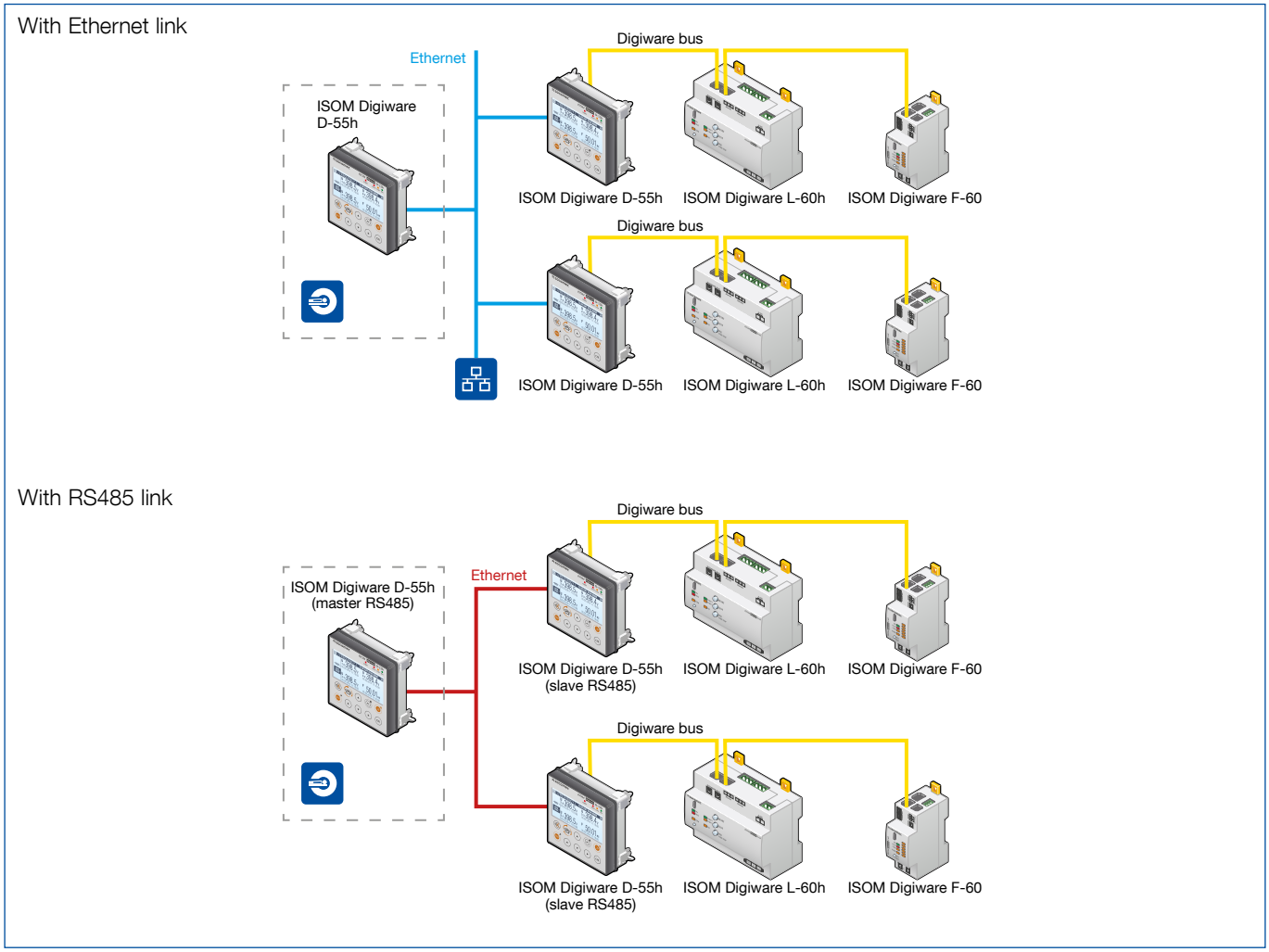

Fig. 6: Insulation monitoring + fault location for hospital applications with 2 IT transformers.

Coupled networks

In coupled networks, one ISOM Digiware system is installed per source. Depending on the coupled sources, only one IMD must be active in accordance with the IEC 60364 system standard. To meet this specification, the ISOM Digiware architecture includes a mechanism to inhibit an IMD and to exchange data between the active IMD and all the facility's fault-locating devices. It does this via the Digiware bus and the Ethernet link between displays.
Our example shows two sources being used. This concept can be extended to N sources.

Source 1 equipment	Source 2 equipment
• 1x ISOM Digiware D-55 or D-75 display • 1x ISOM Digiware L-60 IMD • 1x DIRIS Digiware U • ISOM Digiware F-60 IFLs • Fault-locating core balance transformers • Current measurement sensors (if U is present)	• 1x ISOM Digiware D-55 or D-75 display • 1x ISOM Digiware L-60 IMD • 1x DIRIS Digiware U • ISOM Digiware F-60 IFLs • Fault-locating core balance transformers • Current measurement sensors (if U is present)

ISOM Digiware L-60 IMDs are equipped with special functions. These functions are as follows:

Specific function	Description
IN0	IMD management
IN1	Digiware bus management
IN2	Ethernet link management

You can combine these functions to manage the different situations that occur in a multi-source set-up.
Assign these specific functions to logical inputs on the L-60 to manage the exchanges between multiple ISOM Digiware systems.
The specific functions are easy to assign to L-60's 3 logical inputs with the software Easy Config System.
To ensure proper management of network coupling, the D-x5 screens must be connected to the same Ethernet network or at least to the same Ethernet switch in the absence of an existing network.
The screens must be reciprocally declared in their Digiware typology (ie with a total of 32 DIGIWARE slaves maximum in each screen).

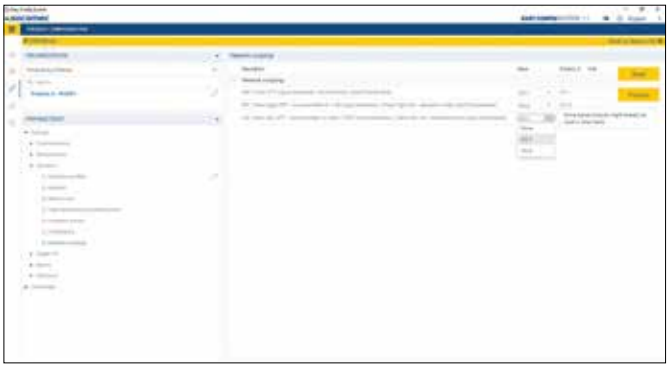

Fig. 7: Via Easy Config.

The change of the input states is done through a PLC or special wiring, for example.

Note: Changes in the configuration of the networks themselves are not managed by ISOM Digiware systems but via ATS and PLC.

The inputs assigned to the IN0, IN1 and IN2 functions of the ISOM L-60 must first be set to "Normally Open".

Fig. 8: Via Easy Config.

Initial state: independent networks

In this initial state, the networks are not coupled. There is one active ISOM Digiware system for each source (one active IMD per source).

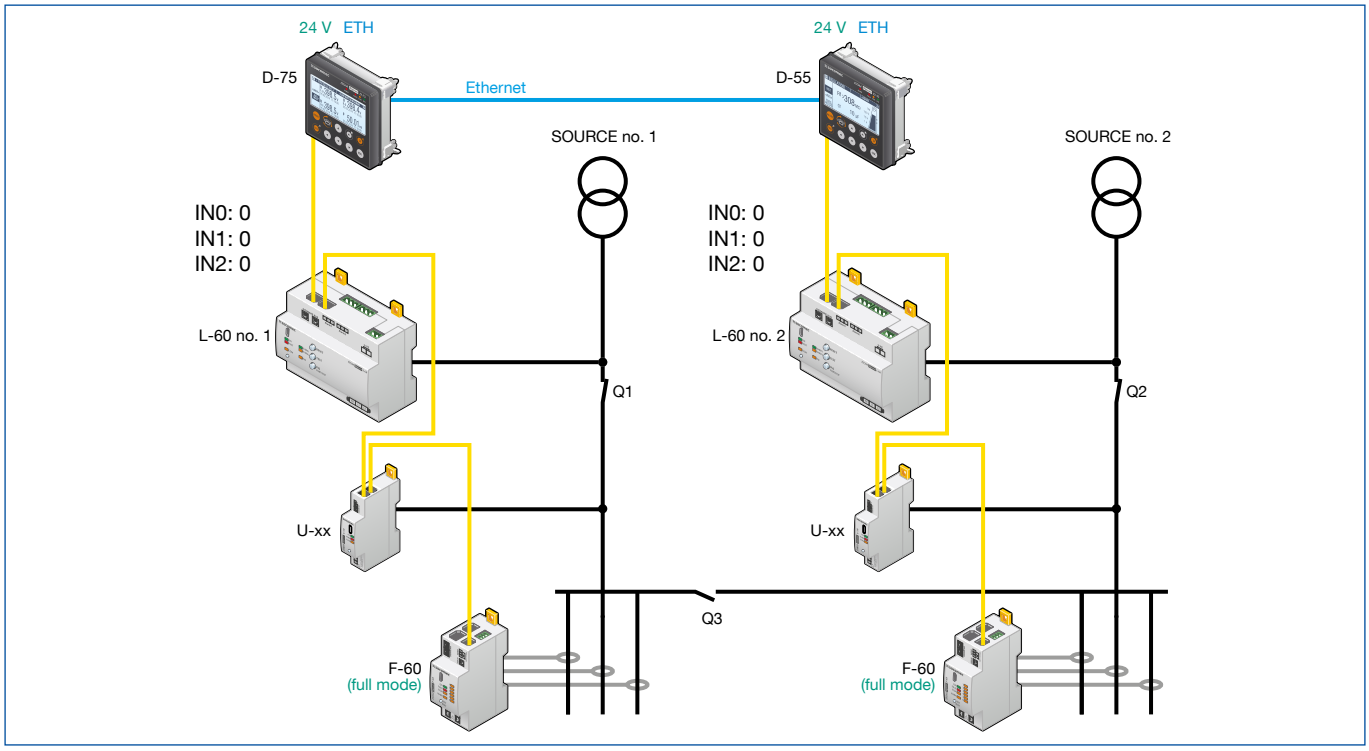

Fig. 9: Initial state, two active sources on two independent networks.

The specific functions of both ISOM Digiware L-60 IMDs are then configured by managing the two networks independently.

Source no. 1: ISOM Digiware no. 1

Function	Status	Description	Effect
IN0	Inactive (0)	Connected IMD	L-60 no. 1 is connected (measures insulation and locating current injector)
IN1	Inactive (0)	Digiware managed locally	Insulation data sent from L-60 no. 1 to F-60 no. 1 connected via the Digiware bus
IN2	Inactive (0)	No insulation data sent to other ISOM Digiware systems	No insulation data sent from L-60 no. 1 to ISOM Digiware system no. 2 via the Ethernet bus

Source no. 2: ISOM Digiware no. 2

Function	Status	Description	Effect
IN0	Inactive (0)	Connected IMD	L-60 no. 2 is connected (measures insulation and locating current injector)
IN1	Inactive (0)	Digiware managed locally	Insulation data sent from L-60 no. 2 to F-60 no. 2 connected via the Digiware bus
IN2	Inactive (0)	No insulation data sent to other ISOM Digiware systems	No insulation data sent from L-60 no. 2 to ISOM Digiware system no. 1 via the Ethernet bus

Example of the assignment and configuration of logical inputs*

Function	Input assignment	State of inputs L-60 no. 1	State of inputs L-60 no. 2
IN0	Input 1	0	0
IN1	Input 2	0	0
IN2	Input 3	0	0

** The state of an input at "0" corresponds to a physically open input.*
The state of an input at "1" corresponds to a physically closed input.

Coupled state: interconnected networks supplied by two sources

In this state, there can only be one IMD active. The second IMD must be stopped and all IFLs must be able to communicate with the active IMD.

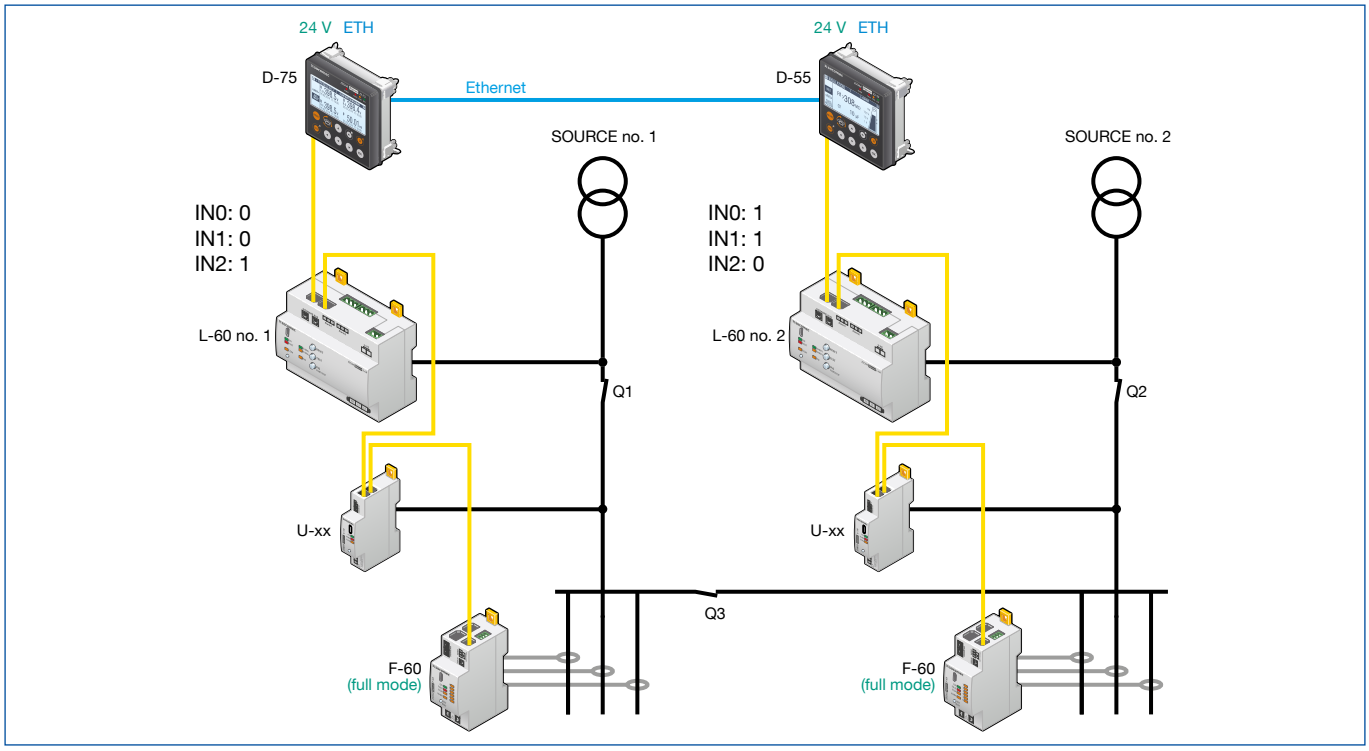

Fig. 10: Coupled state, interconnected networks supplied by two sources.

The functions of both ISOM Digiware L-60 IMDs are then configured to manage the networks' interconnection.

Source no. 1: ISOM Digiware no. 1

Function	Status	Description	Effect
IN0	Inactive (0)	Connected IMD	L-60 no. 1 is connected (measures insulation and locating current injector)
IN1	Inactive (0)	Digiware managed locally	Insulation data sent from L-60 no. 1 to F-60 no. 1 connected via the Digiware bus
IN2	Active (1)	Insulation data sent to other ISOM Digiware systems	Insulation data sent between L-60 no. 1 and ISOM Digiware system no. 2 through Ethernet bus via D-x5 no. 1 and D-x5 no. 2

Source no. 2: ISOM Digiware no. 2

Function	Status	Description	Effect
IN0	Active (1)	IMD disconnected	L-60 no. 2 is disconnected (does not measure insulation or locating current injector)
IN1	Active (1)	Digiware managed remotely	Insulation data sent from L-60 no. 1 to F-60 no. 2
IN2	Inactive (0)	No insulation data sent to other ISOM Digiware systems	No insulation data sent from L-60 no. 2 to ISOM Digiware system no. 1 via the Ethernet bus

Example of the assignment and configuration of logical inputs

Function	Input assignment	State of inputs L-60 no. 1	State of inputs L-60 no. 2
IN0	Input 1	0	1
IN1	Input 2	0	1
IN2	Input 3	1	0

If there are multiple interconnected sources, the functions of IMD nos. 2 to N will be configured in exactly the same way.

Coupled state: interconnected networks supplied by one source

In this state, there can be only one active IMD (IMD at source no. 1). The second IMD only monitors source no. 2. All F-60 IFLs shall communicate with the IMD at source No. 1.

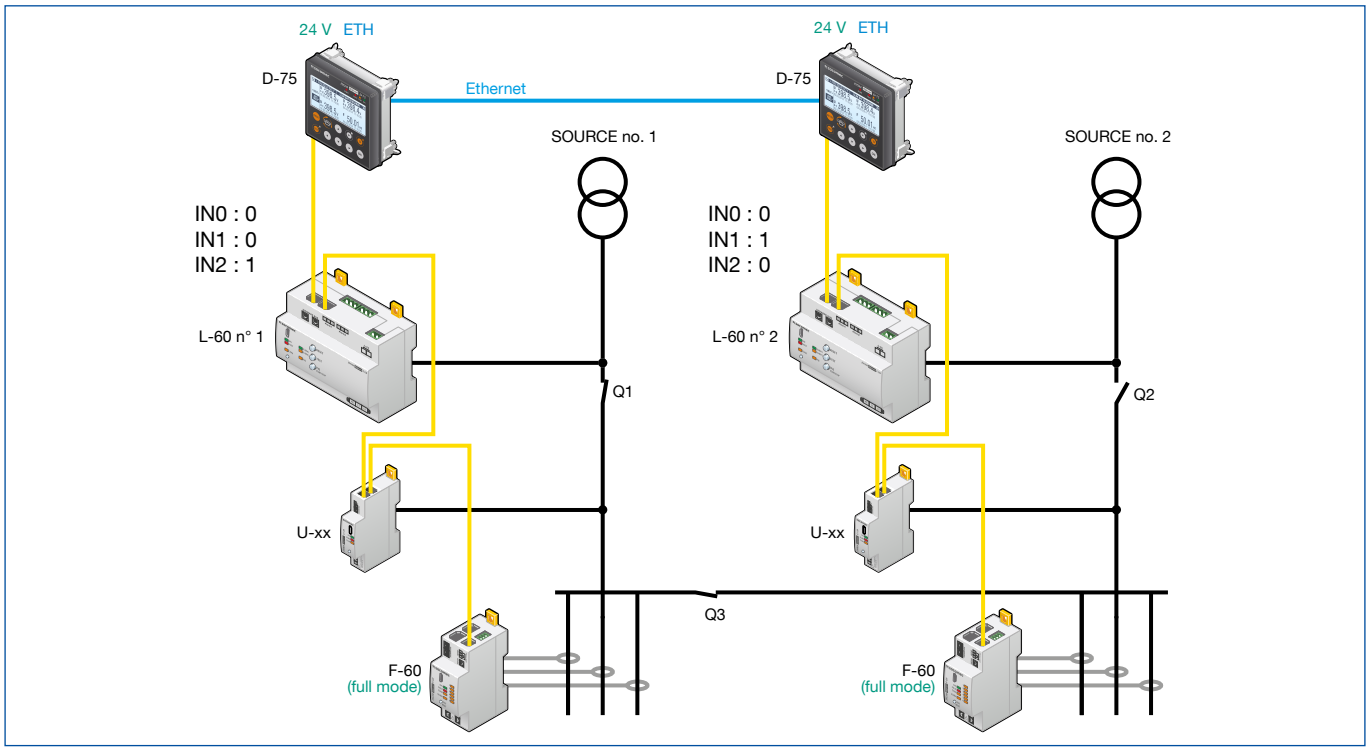

Fig. 11: Coupled state, interconnected networks supplied by one source.

The functions of both ISOM Digiware L-60 IMDs are then configured to manage the networks' interconnection.

Source no. 1: ISOM Digiware no. 1

Function	Status	Description	Effect
IN0	Inactive (0)	Connected IMD	L-60 no. 1 is connected (measures insulation and locating current injector)
IN1	Inactive (0)	Digiware managed locally	Insulation data sent from L-60 no. 1 to F-60 no. 1 connected via the Digiware bus
IN2	Active (1)	Insulation data sent to other ISOM Digiware systems	Insulation data sent between L-60 no. 1 and ISOM Digiware system no. 2 through Ethernet bus via D-x5 no. 1 and D-x5 no. 2

Source no. 2: ISOM Digiware no. 2

Function	Status	Description	Effect
IN0	Inactive (0)	Connected IMD	L-60 no. 2 is connected (measures insulation at source no. 2, with locating current injector*)
IN1	Active (1)	Digiware managed remotely	Insulation data sent from L-60 no. 1 to F-60 no. 2
IN2	Inactive (0)	No insulation data sent to other ISOM Digiware systems	No insulation data sent from L-60 no. 2 to ISOM Digiware system no. 1 via the Ethernet bus

Example of the assignment and configuration of logical inputs

Function	Input assignment	State of inputs L-60 no. 1	State of inputs L-60 no. 2
IN0	Input 1	0	0
IN1	Input 2	0	1
IN2	Input 3	1	0

If there are multiple interconnected sources, the functions of IMD nos. 2 to N will be configured in exactly the same way.

** Q2 in an open state, with the locating current fed in by L-60 no. 2 is not sent to F-60 no. 2*

Coupled networks with remote F-60s

This use is particularly interesting in the case of coupled (see p. 11) and extended (see p.8) networks, where a Digiware link with F-60s placed downstream of the distribution is not possible.
This installation design is compatible with the use of the OhmScanner function.
In the example developed below, two sources are used. This concept can be extended to N sources, as well as to the use of sources transfers, on the same level or installed in cascade.

Equipments source 1 (upstream panel)	Equipments source 2 (upstream panel)
• 1 ISOM Digiware D-55 or D-75 display • 1 IMD ISOM Digiware L-60 • 1 DIRIS Digiware U • ISOM Digiware F-60 IFLS • Fault locating core balance transformers • Current measurement sensors (optional)	• 1 ISOM Digiware D-55 or D-75 display • 1 IMD ISOM Digiware L-60 • 1 DIRIS Digiware U • ISOM Digiware F-60 IFLS • Fault locating core balance transformers • Current measurement sensors (optional)

Equipments source 1 (downstream panel)	Equipments source 2 (downstream panel)
• 1 ISOM Digiware D-55 or D-75 display • 1 DIRIS Digiware U • ISOM Digiware F-60 IFLS • Fault locating core balance transformers • Current measurement sensors (optional) • 1 DIRIS Digiware IO-10 I/O module	• 1 ISOM Digiware D-55 or D-75 display • 1 DIRIS Digiware U • ISOM Digiware F-60 IFLS • Fault locating core balance transformers • Current measurement sensors (optional) • 1 DIRIS Digiware IO-10 I/O module

The use of DIRIS Digiware IO-10 modules makes it possible to dynamically manage the exchange of the necessary information between upstream and downstream Digiware systems, through an Ethernet network.
Assigning the state “0” or “1” to an input of the IO-10 modules defines which active L-60 CPI must be taken into account by the downstream F-60s.

The system settings will be made:
• locally in the D-x5 displays in order to declare the other communicating displays,
• using Easy Config System to adjust the management of information exchanges.

All the necessary settings are listed in the summary table on the next page.

Tableau de synthèse du paramétrage des appareils :

	ISOM Digiware D-x5	**Easy Config System / configuration**			**Easy Config System / token dashboard**	
	Parameters / add device manually	Digital I/O / Digital Input	Insulation / Network coupling	Advanced network coupling / Ethernet token input	Variable - Published Services - Index	Subscribing devices
D-55 IP1	D-55 IP2 & IP3 & IP4	-	-	-	-	-
L-60_1	-	-	IN0: I/O 1 IN1: I/O 2 IN2: I/O 3	-	-	-
D-55 IP2	D-55 IP1 & IP3 & IP4	-	-	-	-	-
L-60_2	-	-	IN0: I/O 1 IN1: I/O 2 IN2: I/O 3	-	-	-
D-55 IP3	D-55 IP1 & IP2	-	-	Ethernet token input 1: Status: **Enabled** IP Address: **IP1** Inputs value: **0** Mask: **1** Ethernet token input 2: Status: **Enabled** IP Address: **IP2** Inputs value: **1** Mask: **1**	-	-
IO-10_1	-	Logical Input 1: Logical Input Mode: **State** Type: **Normally Open**	-	-	**1 – Input state - 1**	**D-55 IP3**
D-55 IP4	D-55 IP1 & IP2	-	-	Ethernet token input 1: Status : **Enabled** IP Address : **IP2** Inputs value : **0** Mask : **1** Ethernet token input 2: Status : **Enabled** IP Address : **IP1** Inputs value : **1** Mask : **1**	-	-
IO-10_2	-	Logical Input 1: Logical Input Mode: **State** Type: **Normally Open**	-	-	**1 – Input state - 1**	**D-55 IP4**

Initial state: independent networks with remote F-60

In this initial state, the networks are not coupled. There is one active ISOM Digiware system for each source (one active IMD per source). Downstream F-60 respectively receive information from their respective L-60.

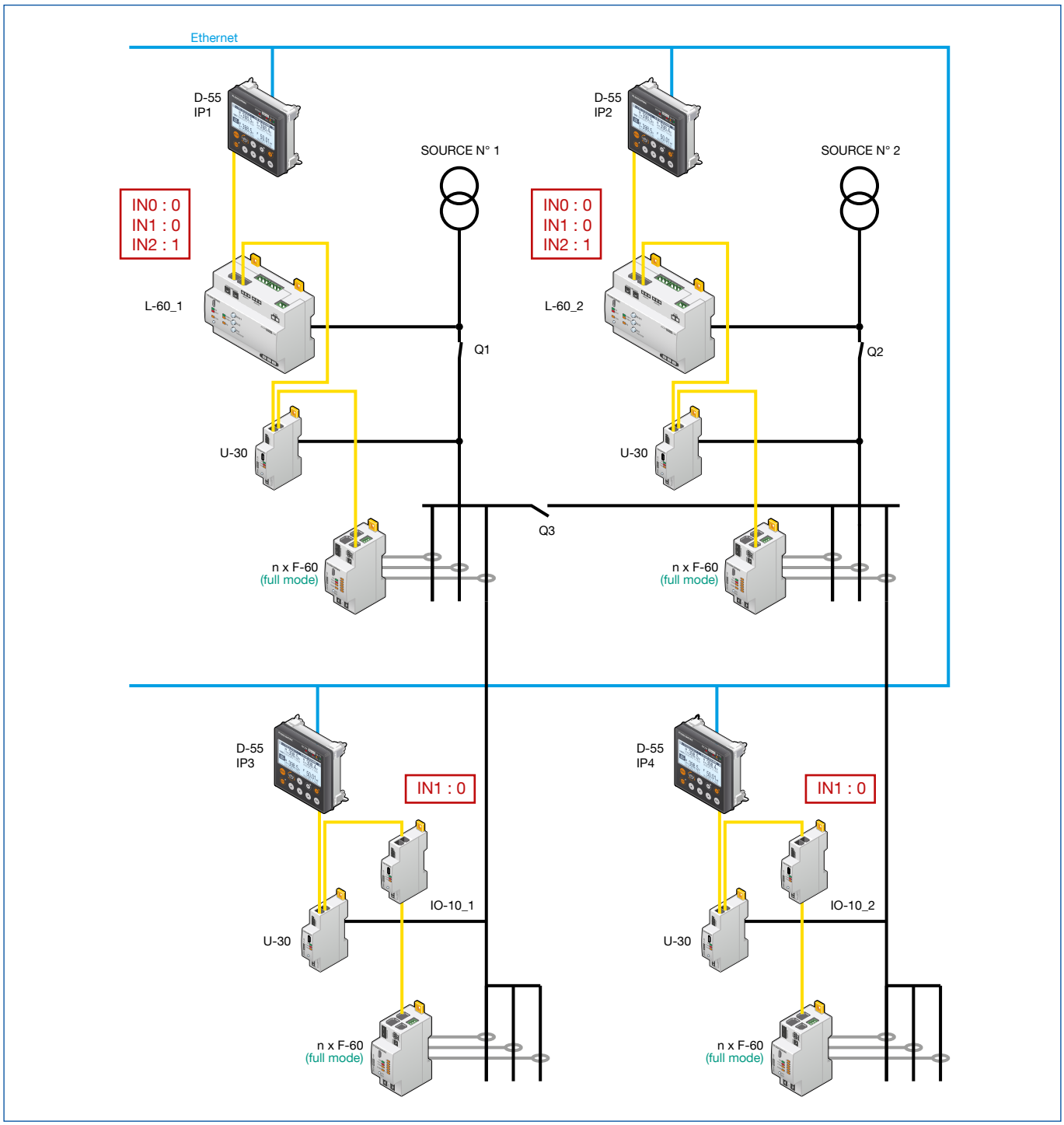

The specific functions of the two ISOM Digiware L-60 CPIs are configured in order to manage the two networks independently (see tables p.13).
The IN1 input of the 2x IO-10 is configured to manage each downstream F-60 of the same Digiware system with its respective L-60:

Device / Input	Status	Description	Effect
IO-10_1 / IN1	0	D-55 IP1 screen assignment (L-60 source Nr 1)	The F-60 under D-55 IP3 receive the information from the L-60 source Nr 1
IO-10_2 / IN1	0	D-55 IP2 screen assignment (L-60 source Nr 2)	The F-60s under D-55 IP4 receive the information from the L-60 source Nr 2

Coupled state: interconnected networks with remote F-60, IMD source Nr 1 active

In this state, there can only be one IMD active. The second IMD must be stopped and all IFLs must be able to communicate with the active IMD (L-60 source Nr1).

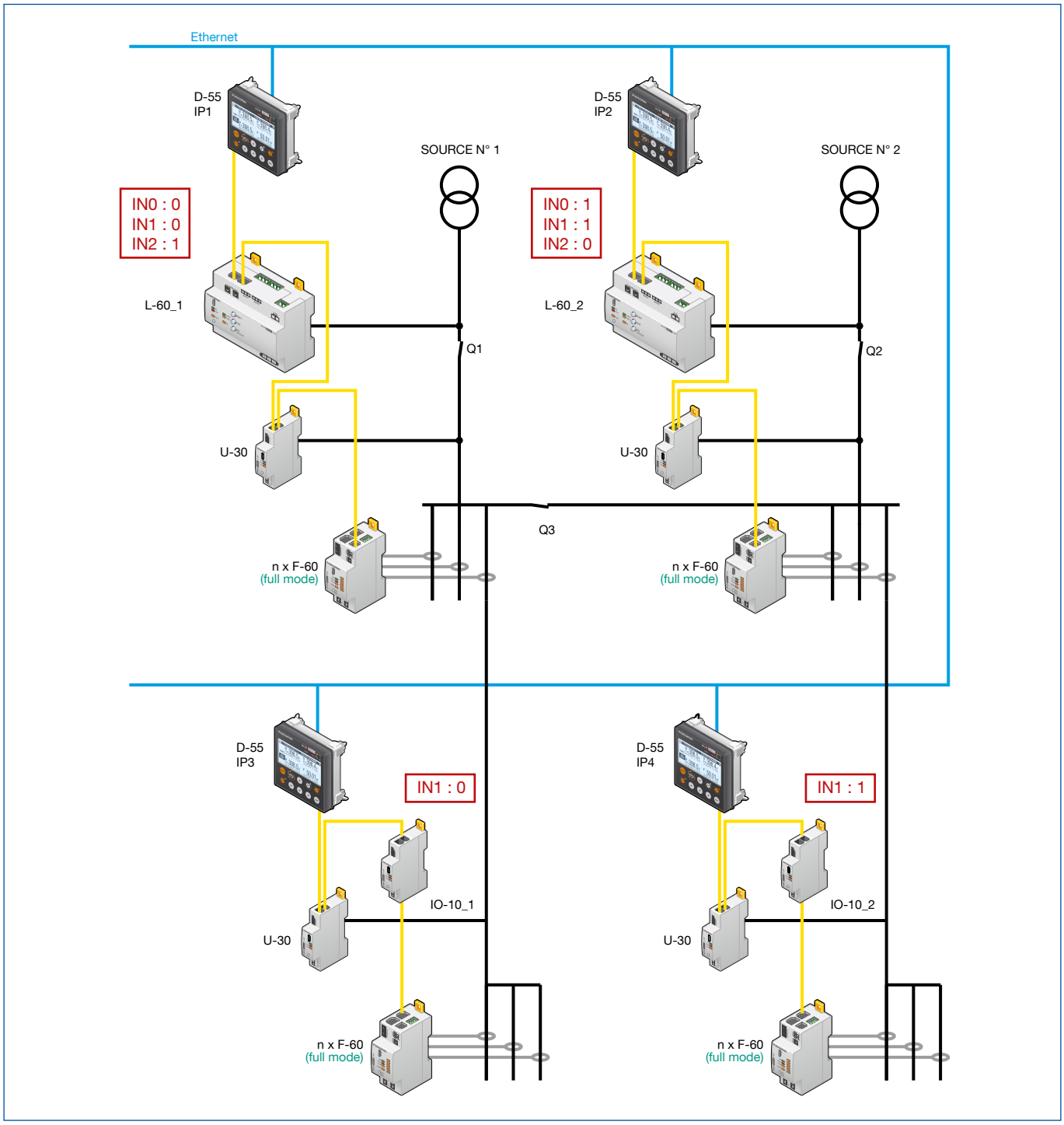

The specific functions of the two ISOM Digiware L-60 CPI are configured in order to manage the interconnection of the networks (see tables p.13).
The IN1 input of the 2x IO-10 is configured in order to manage all the F-60s downstream with the L-60 source n°1:

Device / Input	Status	Description	Effect
IO-10_1 / IN1	0	D-55 IP1 screen assignment (L-60 source Nr 1)	The F-60 under D-55 IP3 receive the information from the L-60 source Nr 1
IO-10_2 / IN1	1	D-55 IP1 screen assignment (L-60 source Nr 1)	The F-60 under D-55 IP4 receive the information from the L-60 source Nr 1

Coupled state: interconnected networks with remote F-60, IMD source Nr 2 active

In this state, there can only be one IMD active. The second IMD must be stopped and all IFLs must be able to communicate with the active IMD (L-60 source Nr2).

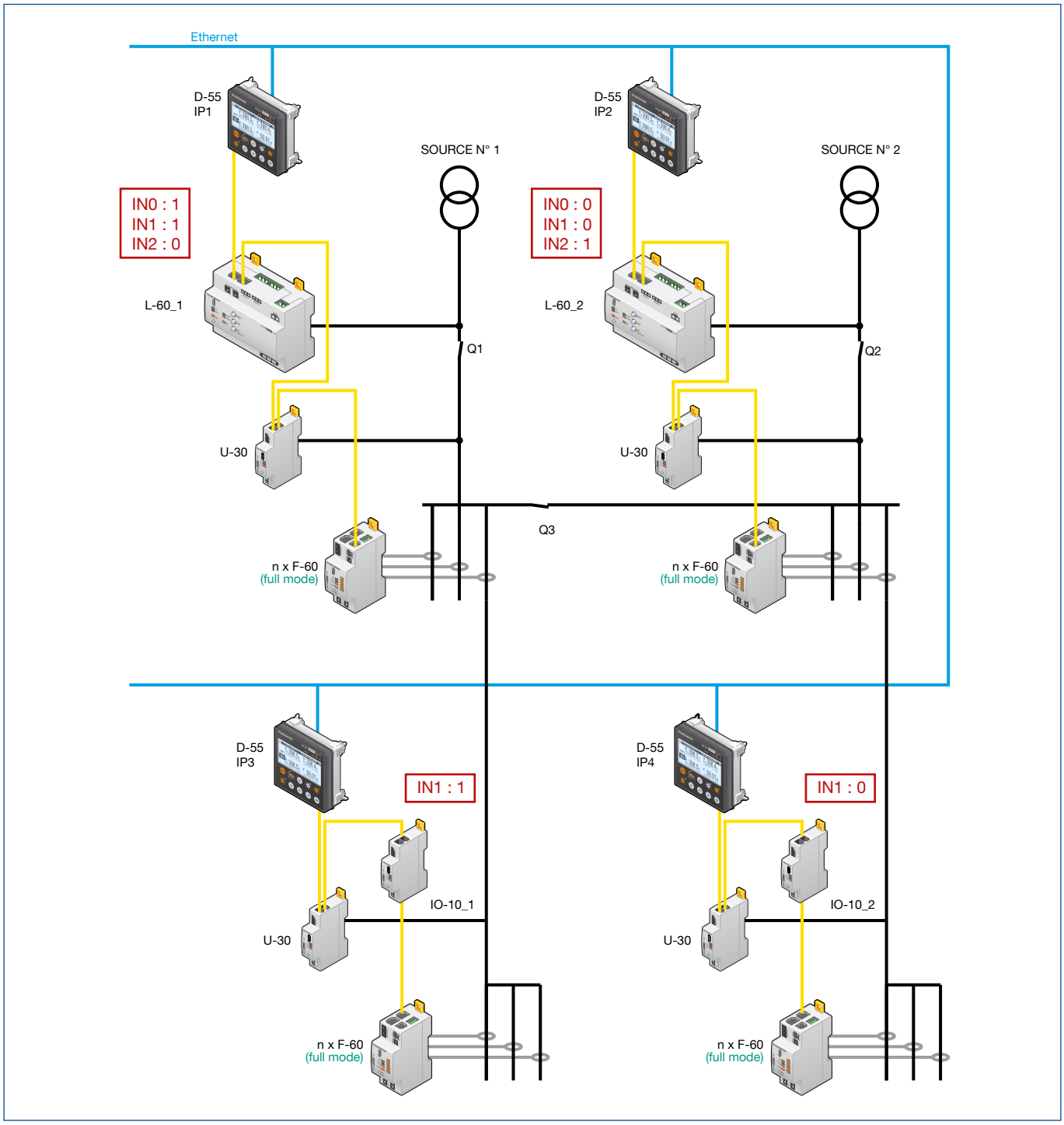

The specific functions of the two ISOM Digiware L-60 CPI are configured in order to manage the interconnection of the networks (see tables p.13 with switching of status between L-60 source Nr 1 and L-60 source Nr 2).
The IN1 input of the 2x IO-10 is configured in order to manage all the F-60s downstream with the L-60 source n°2.

Device / Input	Status	Description	Effect
IO-10_1 / IN1	1	D-55 IP2 screen assignment (L-60 source Nr 2)	The F-60 under D-55 IP3 receive the information from the L-60 source Nr 2
IO-10_2 / IN1	0	D-55 IP2 screen assignment (L-60 source Nr 2)	The F-60 under D-55 IP4 receive the information from the L-60 source Nr 2

Socomec: our innovations supporting your energy performance

1 independent manufacturer

3,600 employees worldwide

10 % of sales revenue dedicated to R&D

400 experts dedicated to service provision

Your power management expert

POWER SWITCHING

POWER MONITORING

POWER CONVERSION

ENERGY STORAGE

EXPERT SERVICES

The specialist for critical applications

- Control, command of LV facilities
- Safety of persons and assets

- Measurement of electrical parameters
- Energy management

- Energy quality
- Energy availability
- Energy storage

- Prevention and repairs
- Measurement and analysis
- Optimisation
- Consultancy, commissioning and training

A worldwide presence

12 production sites
- France (x3)
- Italy (x2)
- Tunisia
- India
- China (x2)
- USA (x3)

28 subsidiaries and commercial locations
- Algeria • Australia • Belgium • China • Canada
- Dubai (United Arab Emirates) • France • Germany
- India • Indonesia • Italy • Ivory Coast • Netherlands
- Poland • Portugal • Romania • Serbia • Singapore
- Slovenia • South Africa • Spain • Switzerland
- Thailand • Tunisia • Turkey • UK • USA

80 countries
where our brand is distributed

HEAD OFFICE

SOCOMEC GROUP
SAS SOCOMEC capital 10 607 040 €
R.C.S. Strasbourg B 548 500 149
B.P. 60010 - 1, rue de Westhouse
F-67235 Benfeld Cedex
Tel. +33 3 88 57 41 41 - Fax +33 3 88 57 78 78
info.scp.isd@socomec.com

www.socomec.com

YOUR DISTRIBUTOR / PARTNER

100 years OF SHARED ENERGY

socomec Innovative Power Solutions

Non contractual document. © 2022, Socomec SAS. All rights reserved. - Document printed on paper from sustainably managed forests.

DOT 00836 01 en - 01/23 - Photo: Martin Bernhart - Produced by: Socomec